Installation and Operation Instructions

HEAT ACCUMULATION TANKS
PS 200 N, PS 300 N, PS 500 N, PS 650 N, PS 800 N, PS 1000 N, PS 1500 N, PS 2000 N, PS 3000 N, PS 4000 N and PS 5000 N

CE

Regulus

EN
v. 1.0

CONTENTS

1 Description **3**
1.1 Models 3
1.2 Tank protection 3
1.3 Thermal insulation 3
1.4 Connection points on the tank 3
1.5 Packing 3
2 General Information **3**
3 Technical Data and Dimensions **4**
4 Operation **5**
5 Examples of ports allocation **5**
6 Installation and Commissioning **7**
7 Installing Insulation on the Tank **8**
8 Maintenance **10**
9 Disposal **10**
10 Warranty **10**

1 - Description

PS E Heat Accumulation Tanks are intended for accumulation and subsequent distribution of thermal energy from solid-fuel fired boilers, heat pumps, solar collectors, electric boilers etc. No heating coils can be installed into these tanks, just an el. heating rod. Heating elements of 2-12 kW output can be installed directly into the 6/4” sleeves that are power supplied either with 230V or 3x230V/400V. Tanks are fitted with nine side sleeves to connect heat sources, four for sensor sheaths and one for a safety valve. As an option, 100mm thick insulation for these tanks is sold separately.

1.1 - Models

Eleven models of 200, 300, 500, 650, 800, 1000, 1500, 2000, 3000, 4000 and 5000 l capacity.

1.2 - Tank protection

The inner surface has no finish, no anticorrosion protection, the outer surface is lacquered in gray.

1.3 - Thermal insulation

Tank insulation is available as a separate item, installed on the tank on the spot for easier handling. The insulation is made of 100 mm thick flexible polyurethane foam and fitted with a zippered PVC surface layer.

1.4 - Connection points on the tank

8 side sleeves in a 90° sector (PS 200: 6 sleeves), G 6/4” F thread
1 top sleeve, G 6/4” F thread
4 side sleeves for sensor sheaths, G ½” F thread
1 side sleeve for a 3 bar safety valve (included), G ½” F thread

1.5 - Packing

Tanks are delivered standing, each screwed to its pallet, packed in bubble wrap.
Included in the package is a 3 bar safety valve with G ½” F thread.

2 - General Information

This Owners Manual is an integral and important part of the product and must be handed over to the User. Read carefully the instructions in this Manual as they contain important information concerning safety, installation, operation and maintenance. Keep this Manual for later reference. The appliance shall be installed by a qualified person according to valid rules and Manufacturer‘s Instructions, otherwise the warranty is null and void.

This appliance is designed to accumulate heating water and distribute it subsequently. It shall be connected to a heating system and heat sources.
Using the accumulation tank for other purposes than above described is forbidden and the manufacturer accepts no responsibility for damage caused by improper or wrong use. The accumulation tank shall not be used as a DHW tank!

3 - Technical Data and Dimensions

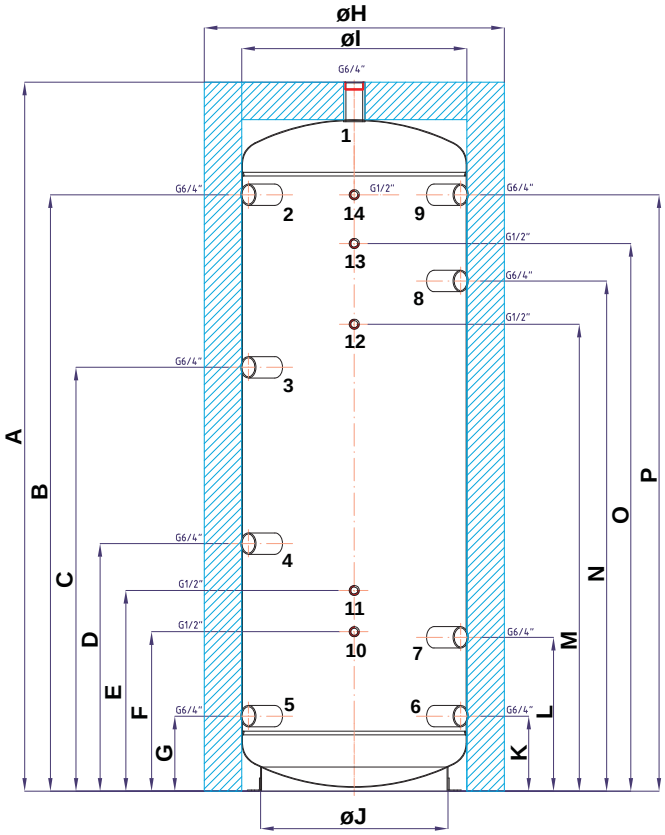

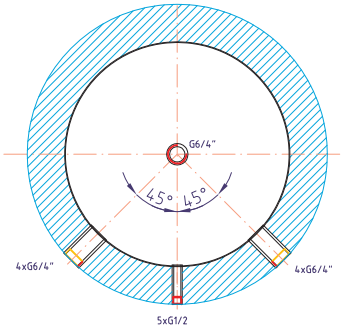

Tank code: ..... **a**
Insulation code: ..... **b**
Total fluid volume in tank: ..... **c**
Max. working pressure in tank: ..... **4 bar**
Max. working temperature in tank: ..... **95 °C**
Empty weight: ..... **d**
Tipping height without insulation: ..... **e**

Type - model		PS200 N	PS300 N	PS500 N	PS650 N	PS800 N	PS1000 N	PS1500 N	PS2000 N	PS3000 N	PS4000 N	PS5000 N
Tank code	a	10050	10053	10054	12311	10056	10058	10060	10138	10139	10140	10141
Insulation code	b	10107	10108	10120	12319	10123	10125	10146	10147	10148	10149	10150
Fluid volume in tank [l]	c	181	280	474	656	780	914	1505	2005	3022	3992	4999
Empty weight [kg]	d	41	51	71	84	98	108	174	207	293	407	469
Tipping height [mm]	e	-	-	1920	1970	1870	2110	1940	2020	2160	2490	2970
Dimensions [mm]	A	1326	1380	1890	1930	1820	2070	1860	1930	2040	2335	2855
	B	1068	1095	1590	1610	1430	1680	1450	1485	1540	1835	2335
	C	768	770	1130	1150	1050	1220	1070	1105	1160	1375	1705
	D	468	495	660	680	670	750	690	725	780	905	1075
	E	388	415	535	555	580	625	600	635	690	780	925
	F	308	335	425	425	425	500	425	425	520	600	670
	G	168	195	200	220	290	290	310	345	400	445	445
	ø H	650	750	800	900	1000	1000	1300	1450	1700	1800	1800
	ø I	450	550	600	700	800	800	1100	1250	1500	1600	1600
	ø J	340	450	500	600	700	700	1000	1100	1300	1500	1500
	K	168	195	200	220	290	290	310	345	400	445	445
	L	308	335	410	430	490	500	510	545	600	655	775
	M	818	845	1245	1265	1130	1335	1150	1185	1240	1490	1855
	N	868	895	1360	1380	1210	1450	1230	1265	1320	1605	2005
	O	968	995	1460	1480	1310	1550	1330	1365	1420	1705	2105
	P	1068	1095	1590	1610	1430	1680	1450	1485	1540	1835	2335

4 - Operation

In the accumulation tank, heating water is heated up from several heat sources like various types of hot-water boilers, renewable energy sources (heat pumps, solar collectors), or electric heating elements.
The accumulation tank shall be connected to a heat source through G 6/4” threaded fittings. Should the tank be connected to a solar system, this must be done via a heat exchanger because solar systems are not filled with heating water. Individual connection points are assigned according to the circuits to be connected. There is a wide choice of combinations, just some examples are described in the following chapter.

5 - Examples of ports allocation

Conn. point	Example I. -solid boil. + el.	Example II. - firepl. + gas boil.	Example III. - heat p. + el.
1	outlet to a heating system	outlet to a heating system	outlet to a heating system
2	inlet from a solid fuel boiler	outlet to a gas boiler	el. heating element
3	el. heating element	plug	inlet from a heat pump
4	plug	plug	plug
5	inlet to a solid fuel boiler	inlet to a fireplace	return line to a heat pump
6	drain valve, expansion vessel	drain valve, expansion vessel	drain valve, expansion vessel
7	return line from a heating system	return line from a heating system	return line from a heating system
8	plug	plug	plug
9	el. heating element	plug	el. heating element
10	safety valve, G 1/2“, 3 bar	safety valve, G 1/2“, 3 bar	safety valve, G 1/2“, 3 bar
11,12,13,14	sheaths for weather compensated controller, thermometer, thermostat...		

Connections depend on the circuit to be connected, the a.m. examples are informative only.

Example I.
Solid fuel boiler and el. heating element.

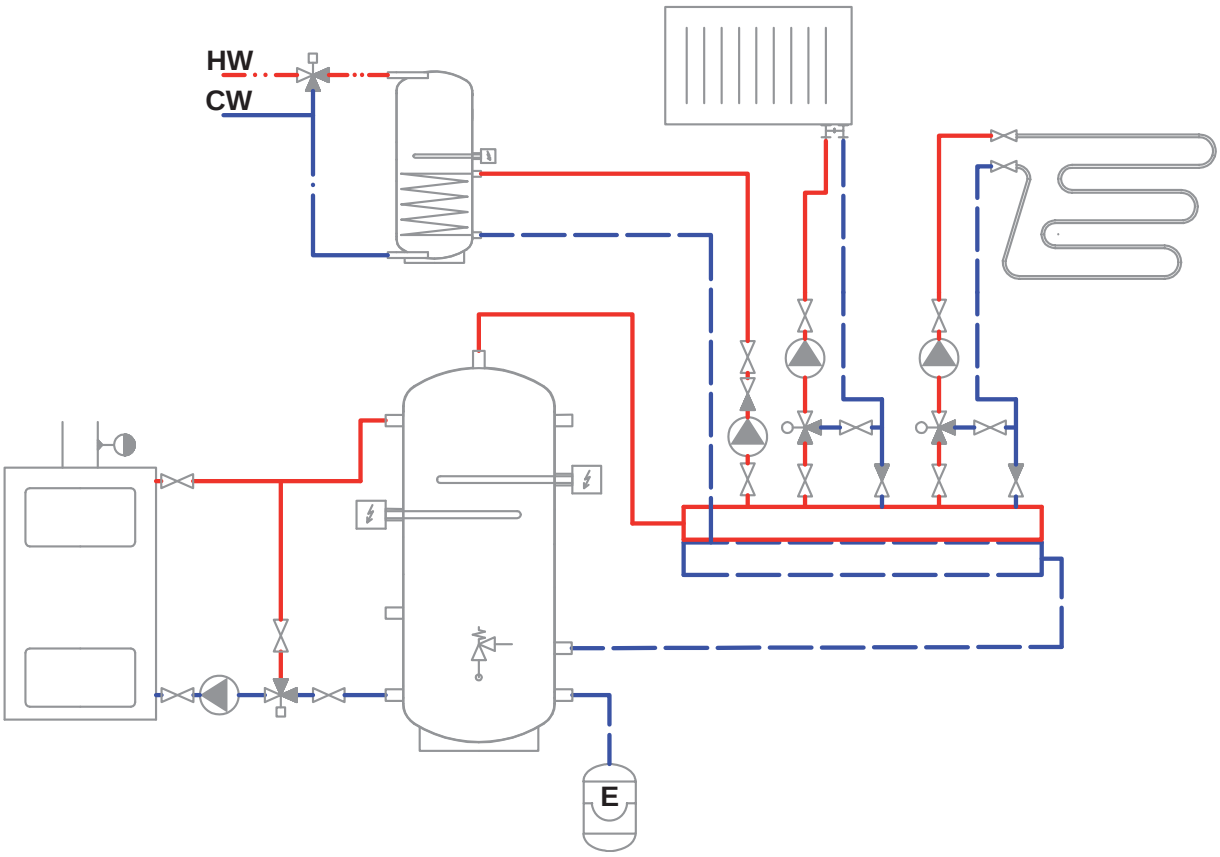

Example II.
Gas fired boiler and hydronic fireplace.

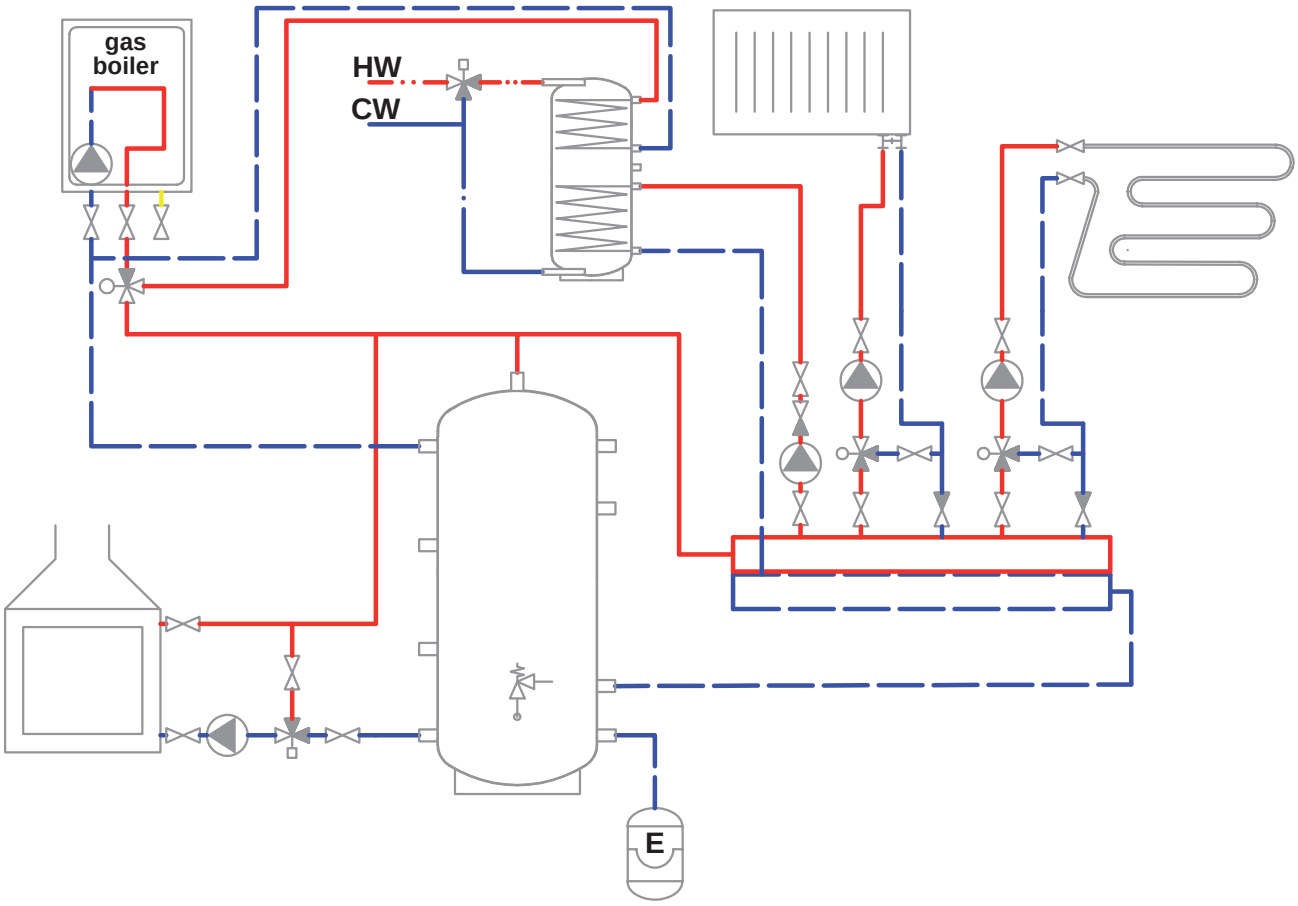

Example III.
Heat pump and electric heating element.

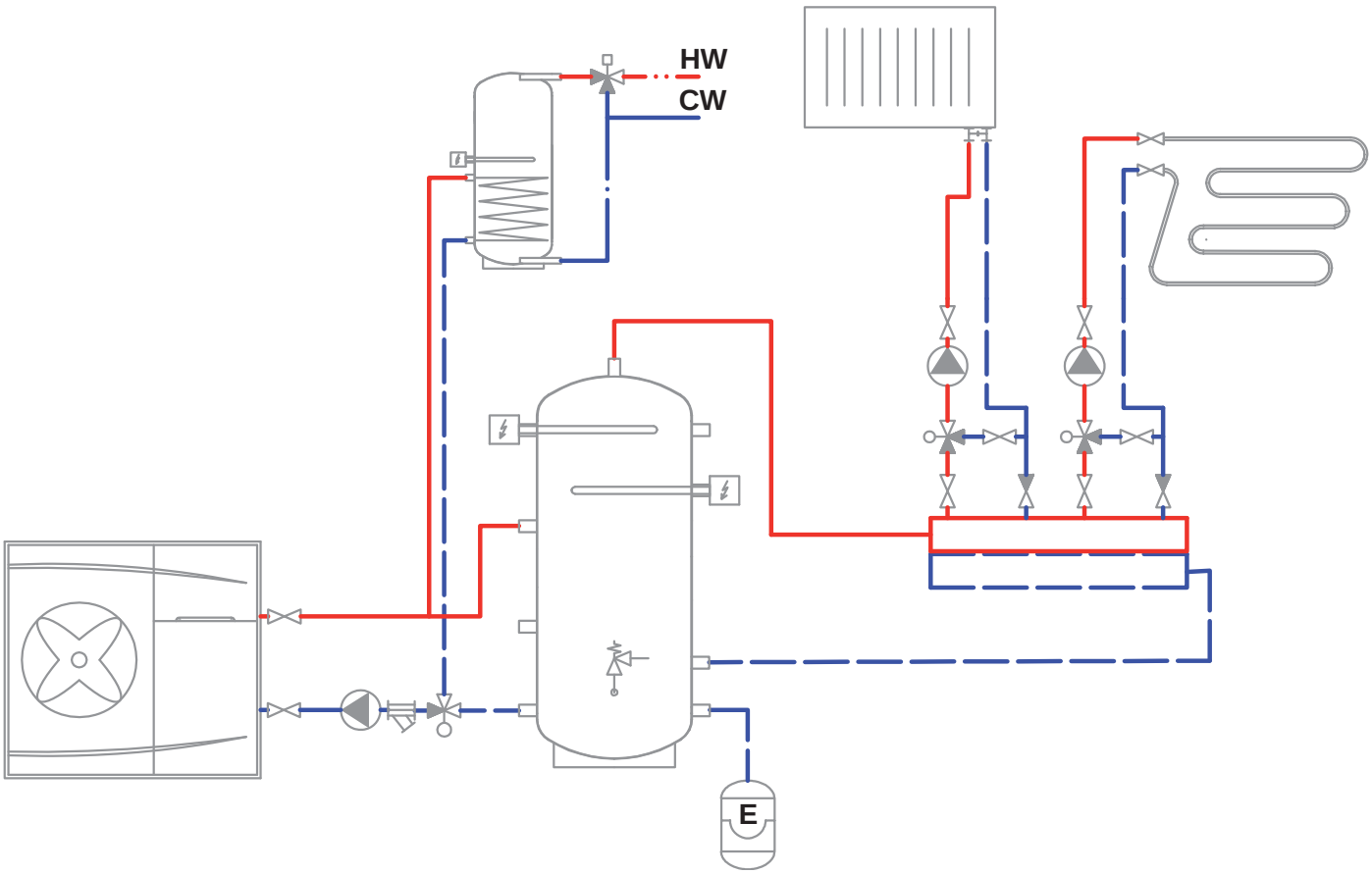

6 - Installation and Commissioning

Installation shall meet valid rules and may be done by qualified staff only.

Defects caused by improper installation, use or handling are not covered by warranty.

After the tank is installed and connected to an existing heating system, it is recommended to clean the entire heating system using a suitable cleaning agent, e.g. MR-501/R.

Anti-corrosion protective liquid should be also used, e.g. MR-501/F or F1.

6.1 - Connection to heat sources

Place the tank on the floor, as close to your heat source as possible. Mount the insulation, cf. Installing Insulation on the Tank. Connect the heating circuits to inlets and outlets respecting the thermal stratification in the tank. Install a drain valve at the lowest point of the tank. Install an air vent valve at the highest point of the system. Insulate all the connecting piping.

6.2 - Connection to a solar system

The tank can is not primarily intended for use with a solar system but if needed, this can be done via a heat exchanger between the solar system and the tank. In such a case, insulate well all the piping between the tank and the solar system.

6.3 - El. heating element installation

The tank may be fitted with electric heating elements up to 12kW output. They can be power-supplied either directly (elements with built-in thermostat) or via a controller for the entire heating system.

All electric heating elements shall be protected by a safety thermostat.

Electric heating elements shall be installed by an authorized person only.

6.4 - Commissioning

This tank is not designed for DHW heating.
The tank shall be filled up together with the heating system, respecting valid standards and rules. In order to minimize corrosion, special additives for heating systems should be used. The quality of heating water depends on the quality of filling water at commissioning, on the top-up water and on the frequency of topping up. This has a strong influence on the lifetime of heating systems. Poor quality of heating water may cause problems like corrosion or incrustation, esp. on heat transfer surfaces.

Fill the heating circuits with the appropriate fluids and air-bleed the entire system. Check all connections for leaks and verify the system pressure. Set the heating controller in compliance with the documentation and manufacturer’s recommendations. Check regularly proper function of all control and adjustment elements.

7 - Installing Insulation on the Tank

Instructions

Product description
Thermal insulation of flexible polyurethane foam with a zippered PVC surface layer.

Warning
Insulation installation shall be done in two or three persons, depending on its size. The zippered, PVC coated flexible-foam insulation **must not be installed at temperatures below 20 °C**. If this cannot be avoided, the insulation shall be pre-warmed in another room to at least 20 °C. It is impossible to install insulation of lower temperature, there is a risk of damage, esp. to the zipper.
Do not use any tools for installation.
Keep away from open fire.

How to install PVC coated flexible foam insulation
1. Fix the tank following installation instructions.
2. Wrap the insulation around the tank carefully. Check that the insulation adheres to its body perfectly. This can be reached by rubbing and patting the insulation by hand from its center evenly in both directions until the insulation adheres to the tank's surface completely and no bubbles are left.
3. Use the holes for sleeves as a rest during the insulation installation.
4. At least one person presses the insulation to the tank, pulling both ends together. The other person closes the zipper, see pics.
5. Put on the upper insulation and cover.
6. Push on the covering plastic rosettes depending on the size of sleeves, or put on the flange plug(s) with insulation.
7. Finish the tank installation in compliance with the respective instructions and valid standards and rules.

Warranty on insulation
The insulation is covered by a 24-month warranty. This period starts the next day after the insulation is sold.

□ Warranty shall become null and void if:
- the procedure described in the Installation Manual was not respected,
- the product was used for other purposes than intended.

□ Warranty does not cover:
- usual wear and tear,
- damage caused by fire, water, electricity or a natural disaster,
- defects caused by failure to use the product in compliance with its intended purpose, by improper use and insufficient maintenance,
- defects caused by mechanical damage to the product,
- defects caused by tampering or incompetent repair.

Pictures showing how to mount PVC coated flexible foam insulation on a storage tank.

8 - Maintenance

If the tank is fitted with a heating element, disconnect it from the mains first. Clean the exterior of the tank with a soft cloth and a mild detergent. Never use abrasive cleaners or solvents.
Check all connections for leaks.

9 - Disposal

Packing shall be disposed of in compliance with the valid rules. When the product reaches the end of its life, it shall not be disposed of as household waste. It shall be dropped off at a Local Waste Recycling Center. Insulation shall be recycled as plastic and the steel vessel as scrap iron.

10 - Warranty

This product is covered by warranty under the conditions listed in this Manual and in compliance with the Warranty Certificate. A Warranty Certificate is an integral part of this accumulation tank scope of supply.

REGULUS spol. s r.o.
Do Koutů 1897/3
143 00 Praha 4
CZECH REPUBLIC

http://www.regulus.eu
E-mail: sales@regulus.cz