Connection Diagram with OpenTherm controlled gas boiler and fireplace insert

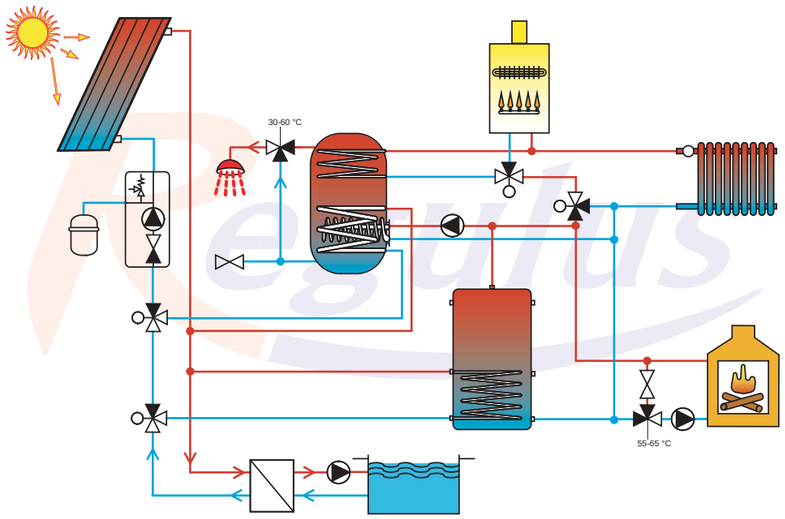

The fig. shows the max. possible configuration of IR 12 OT 102 controller in the version for a gas boiler controlled by OpenTherm protocol and for a fireplace insert. Should some functions be unnecessary, they can be deactivated (e.g. DHW heating or solar system etc.). A gas boiler is fully under control via OpenTherm communication protocol and both the fireplace insert and a solar system can be utilized to maximum for both DHW heating and space heating as well. For the best combustion the centralized air inlet to the fireplace insert is controlled by the motorized flap. The controller is equipped with a function for insert quick firing into the heating system. Further, the controller enables control of one independent mixed circuit with own schedule, DHW heating and a solar system with up to 3 solar cylinders.

Accessories to IR 12 Controller		code
	Pt1000 temperature sensor with 2m cable for solar collectors and cylinders	9108
	TA52 outdoor temperature sensor - Pt1000	9110
	Contact temperature sensor with 4m cable, pipe mount - Pt1000	9789
	Collector surge protector KA 12	9530
	Room unit RC21-IR	11280
	IR 12 module for 6 analog inputs and VFS flowmeter	11732

Example of installation in a distribution box.

IR 12 Controller can be controlled from a tablet as well.

v1.0-03/2012

Regulus spol. s r.o., Czech Republic
Do Koutů 1897/3, 143 00 Praha 4
Tel.: ++420 241 765 191, Fax: ++420 241 763 976
E-mail: sales@regulus.cz
Web: www.regulus.eu

IR 12 Intelligent Digital Controller

Energy-saving solutions

IR 12 Digital Controller

IR 12 Digital controller in its modifications is designed to control mixed heating circuits per its own time schedules, changing between two temperature levels (comfort/setback). Further it facilitates DHW heating by time schedule and temperatures set, control of a solar system with up to 3 solar appliances (DHW tank, accumulation tank, pool) and control of gas boilers with OpenTherm communication interface, or control of Regulus CTC heat pumps.

The controller features six keys and an easy-to-read 4-line display. Its integrated web server makes it possible to get connected via a current web browser from your computer (Firefox. Internet Explorer, Chrome etc.) or from your tablet or smartphone. The webserver involves visualization of the technology to be controlled. Easy and well-arranged adjustment of all parameters is a matter of course, like time schedules for heating, heating curves with OTC etc.

If you have your own public IP address, you can control your heating system simply from any place on the globe via the Internet and web browser. A special section is devoted to installers which means that any modification can be made comfortably and quickly via remote access, no need to call a service provider to the spot.

The controller is also equipped with a 2GB SD card for storing important data.

- » Four-line display
- » RJ45 ethernet terminal for LAN connection
- » Integrated web server to visualize the system under control and to modify settings
- » 2GB SD card for measured data storing
- » 13 inputs for Pt1000 temperature sensors
- » 1 input for MRC signal (230 V AC)
- » 1 counter input to connect a pulse flowmeter or electricity meter
- » 10 relay outputs (230 V AC, 3A)
- » 2 semi-conductor output relays to control circulation pump speed (230 V AC, 1A)
- » 2 analog outputs 0-10V
- » Real-time clock
- » DIN rail mount (9 pos. for controller, 2 pos. source, 1 pos. extension module)

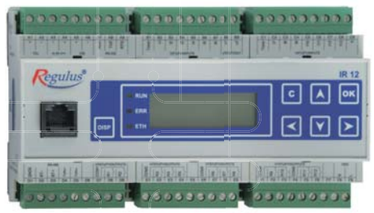

	IR 12 OT 101	IR 12 OT 102	IR 12 TC 201
OpenTherm module	YES	YES	NO
Communication module for Regulus CTC heat pumps	NO	NO	YES
24 V DC, 15W power supply	YES	YES	YES
Number of heat pumps in cascade	-	-	3
Number of mixed circuits with OTC	2	1	2
DHW heating circuit with time schedule	YES	YES	YES
Solar system	YES	YES	YES
Max. number of solar appliances	3	3	2
Fireplace control	NO	YES	NO
Pt1000 temperature sensor with 2 m cable*	5	7	4
Outdoor Pt1000 temperature sensor	1	1	1
Code	11376	11775	10011

IR 12 heating controller with OpenTherm interface IR 12 OT 101 and 102		Code
	IR 12 heating controller	10004
	2GB SD memory card for IR1x	10692
	Power supply for IR1x 15W	10669
	OpenTherm module for IR 12	10442
	Outdoor Pt1000 temperature sensor	9110
	Pt1000 temperature sensor with 2 m cable*	9108

IR 12 heating and CTC heat pump controller IR 12 TC 201		Code
	IR 12 heating controller	10004
	2GB SD memory card for IR1x	10692
	Power supply for IR1x 15W	10669
	CTC Heat Pump module for IR 12	10441
	Outdoor Pt1000 temperature sensor	9110
	Pt1000 temperature sensor with 2 m cable*	9108

** The controller packing does not include sensor for solar system, they shall be ordered separately in the right quantity with respect to the type of solar system in question. Code 9108.*

Connection Diagram with a Heat Pump

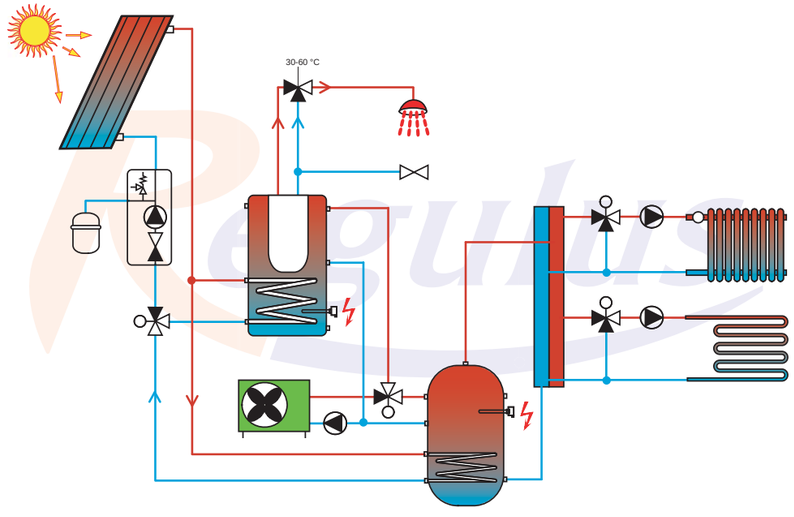

The fig. shows the max. possible configuration of IR 12 controller in the version for a heat pump. Should some functions be unnecessary, they can be deactivated (e.g. DHW heating or solar system etc.). The hydraulic variant with a heat pump enables control of up to 2 independent mixed circuits with own schedules. A heat pump is utilized as much as possible for both heating and DHW heating. When needed, a backup source can be also controlled. The controller makes it possible to control efficiently a cascade of up to 3 heat pumps. If needed, the system can be amended with a solar system with 1-2 solar cylinders (e.g. a DHW tank and accumulation tank).

Connection Diagram with Gas Boiler Controlled via OpenTherm Protocol

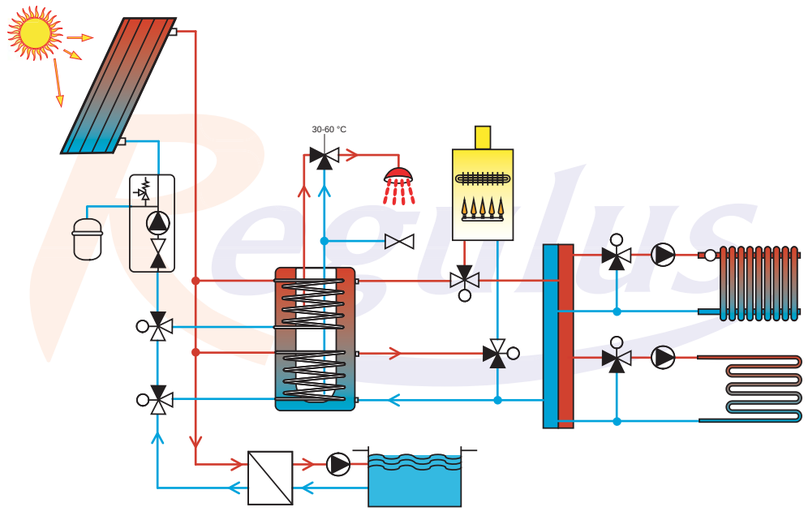

The fig. shows the max. possible configuration of IR 12 OT 101 controller in the version for a gas boiler controlled by OpenTherm protocol. Should some functions be unnecessary, they can be deactivated (e.g. DHW heating or solar system etc.). A gas boiler is fully under control via OpenTherm communication protocol and a solar system can be utilized to maximum for both DHW heating and space heating as well. The hydraulic variant with a gas boiler enables control of up to 2 independent mixed circuits with own schedules, DHW heating and a solar system with up to 3 solar cylinders.